RECMAR Products

Heavy Duty SLIDE-RITE™ Curtain Track

CEILING MOUNT ■ ALUMINUM

3118

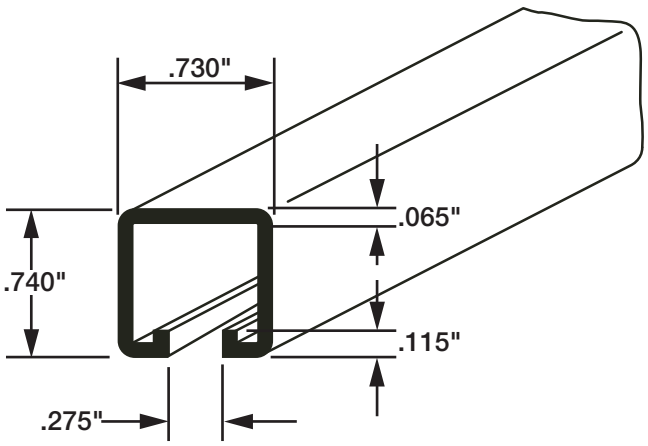

PART #	FINISH	LENGTH	STANDARD PACK
3118	(8) Clear Anodized (84) Black Anodized (Custom Order)	12 ft.	15
3118-90D	(8) Clear Anodized (84) Black Anodized (Custom Order)	90°–12 in. Radius	15

RECMAR's Heavy Duty SLIDE-RITE™ Curtain Track is a durable one way or two way hand draw track with two different carrier systems to meet your exact needs. Crafted with premium quality aluminum to exacting standards. Apply the popular long snap carrier with snap tape, or the double wheel carrier with wrinkle-band tape and hooks for a refined, ripple-fold look.

INSTALLATION OPTIONS

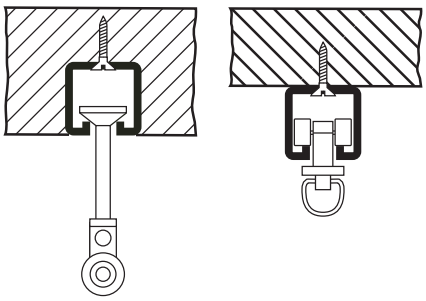

RECESSED MOUNT CEILING MOUNT

5.2 MM DOUBLE WHEEL CARRIER

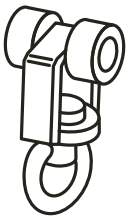

PART #	DESCRIPTION	QTY.
7130	White Nylon, Bag	14
7131	White Nylon, Bulk	1000

LONG SNAP CARRIER

PART #	DESCRIPTION	QTY.
7144-4	Black Acetal Plastic, Bag	100
7145-4	Black Acetal Plastic, Bulk	1000

Note: Use with 3090 Snap Tape

WRINKLE BAND TAPE

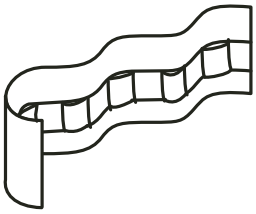

PART #	DESCRIPTION	QTY.
3095	1.15 in. x 330 yards, Roll	1
3096	1.15 in. x 1100 yards, Box	1
3096Y	1.15 in. x 1 yard, Bulk	1

Color: White

SNAP TAPE

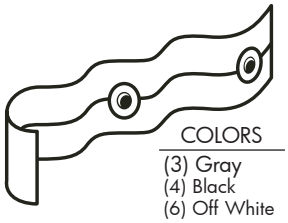

COLORS
(3) Gray
(4) Black
(6) Off White

PART #	DESCRIPTION	QTY.
3090	1 in. x 42½ in., Bag	1
3091	1 in. x 100 yards, Bulk	1
3091Y	1 in. x 1 yard, Bulk	1

Note: 4¼ in. Snap Spacing

WRINKLE BAND HOOK

PART #	DESCRIPTION	QTY.
4142	1 in. Stainless Steel, Bag	14
4143	1 in. Stainless Steel, Bulk	1000

DRAPERY PIN HOOK

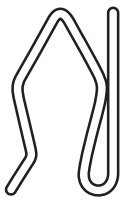

PART #	DESCRIPTION	QTY.
4136	1⅜ in. Steel, Bag	14
4137	1⅜ in. Steel, Bulk	1000
4138	1⅜ in. Stainless Steel, Bag	14
4139	1⅜ in. Stainless Steel, Bulk	1000

END STOP

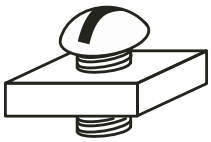

PART #	DESCRIPTION	QTY.
7127	Stainless Steel, Bag	10
7128	Stainless Steel, Bulk	1000

Finishes: (8) Clear, (84) Black

9222 Easthaven Boulevard ■ Houston, Texas 77075 ■ 713-944-4885 ■ FAX 713-944-4809
TOLL FREE 800-793-9611 ■ FAX 800-724-0199 ■ service@recmar.com ■ www.recmar.com